INTERNATIONAL STANDARD

ISO 13926-2

Third edition
2017-11

Pen systems —

Part 2: Plunger stoppers for pen-injectors for medical use

Systèmes de stylos-injecteurs —

Partie 2: Bouchons-pistons pour stylos-injecteurs à usage médical

iTeh STANDARD PREVIEW
(standards.iteh.ai)
ISO 13926-2:2017
https://standards.iteh.ai/catalog/standards/sist/f70bce3d-9802-4cf5-ae6d-b86c6c314107/iso-13926-2-2017

Reference number
ISO 13926-2:2017(E)

© ISO 2017

iTeh STANDARD PREVIEW
(standards.iteh.ai)

ISO 13926-2:2017
https://standards.iteh.ai/catalog/standards/sist/f70bce3d-9802-4cf5-ae6d-b86c6c314107/iso-13926-2-2017

COPYRIGHT PROTECTED DOCUMENT

© ISO 2017, Published in Switzerland

All rights reserved. Unless otherwise specified, no part of this publication may be reproduced or utilized otherwise in any form or by any means, electronic or mechanical, including photocopying, or posting on the internet or an intranet, without prior written permission. Permission can be requested from either ISO at the address below or ISO's member body in the country of the requester.

ISO copyright office
Ch. de Blandonnet 8 • CP 401
CH-1214 Vernier, Geneva, Switzerland
Tel. +41 22 749 01 11
Fax +41 22 749 09 47
copyright@iso.org
www.iso.org

Contents

Page

Foreword ... **iv**
Introduction ... **v**
1 Scope ... **1**
2 Normative references ... **1**
3 Terms and definitions ... **1**
4 Classification ... **1**
5 Shape and dimensions ... **2**
6 Designation ... **3**
7 Material ... **3**
8 Requirements ... **3**
8.1 General ... 3
8.2 Physical requirements ... 3
8.2.1 Hardness ... 3
8.2.2 Freedom from leakage ... 3
8.2.3 Initiating and sustaining forces ... 4
8.2.4 Resistance to ageing ... 4
8.3 Chemical requirements ... 4
8.4 Biological requirements ... 4
9 Labelling ... **4**
Annex A (normative) **Leakage test** ... **5**
Bibliography ... **7**

iTeh STANDARD PREVIEW
(standards.iteh.ai)
ISO 13926-2:2017
https://standards.iteh.ai/catalog/standards/sist/f70bce3d-9802-4cf5-ae6d-b86c6c314107/iso-13926-2-2017

Foreword

ISO (the International Organization for Standardization) is a worldwide federation of national standards bodies (ISO member bodies). The work of preparing International Standards is normally carried out through ISO technical committees. Each member body interested in a subject for which a technical committee has been established has the right to be represented on that committee. International organizations, governmental and non-governmental, in liaison with ISO, also take part in the work. ISO collaborates closely with the International Electrotechnical Commission (IEC) on all matters of electrotechnical standardization.

The procedures used to develop this document and those intended for its further maintenance are described in the ISO/IEC Directives, Part 1. In particular the different approval criteria needed for the different types of ISO documents should be noted. This document was drafted in accordance with the editorial rules of the ISO/IEC Directives, Part 2 (see www.iso.org/directives).

Attention is drawn to the possibility that some of the elements of this document may be the subject of patent rights. ISO shall not be held responsible for identifying any or all such patent rights. Details of any patent rights identified during the development of the document will be in the Introduction and/or on the ISO list of patent declarations received (see www.iso.org/patents).

Any trade name used in this document is information given for the convenience of users and does not constitute an endorsement.

For an explanation on the voluntary nature of standards, the meaning of ISO specific terms and expressions related to conformity assessment, as well as information about ISO's adherence to the World Trade Organization (WTO) principles in the Technical Barriers to Trade (TBT) see the following URL: www.iso.org/iso/foreword.html.

iTeh STANDARD PREVIEW
(standards.iteh.ai)

This document was prepared by Technical Committee ISO/TC 76, *Transfusion, infusion and injection, and blood processing equipment for medical and pharmaceutical use*.

ISO 13926-2:2017
https://standards.iteh.ai/catalog/standards/sist/f70bce3d-9802-4cf5-ae6d-b8016c3b4107/iso-13926-2-2017

This third edition cancels and replaces the second edition (ISO 13926-2:2011), which has been technically revised. It also incorporates the Amendment ISO 13926-2:2011/Amd. 1:2015.

The main changes compared to the previous edition are as follows:

— the dimensions d_1, d_2 and d_3 in Table 1 have been changed from normative to informative; d_2 is required to align with ISO 13926-1;

— Formula (A.1) has been corrected.

A list of all parts in the ISO 13926 series can be found on the ISO website.

 © ISO 2017 – All rights reserved

Introduction

Primary packaging components made of elastomeric materials are an integral part of medicinal products and thus, the principles of current Good Manufacturing Practices (cGMP) apply to the manufacturing of these components.

Principles of cGMP are described in, for example, ISO 15378 or GMP Guidelines as published by the European Community and the United States of America.

iTeh STANDARD PREVIEW
(standards.iteh.ai)

ISO 13926-2:2017
https://standards.iteh.ai/catalog/standards/sist/f70bce3d-9802-4cf5-ae6d-b86c6c314107/iso-13926-2-2017

© ISO 2017 – All rights reserved

iTeh STANDARD PREVIEW
(standards.iteh.ai)

ISO 13926-2:2017
https://standards.iteh.ai/catalog/standards/sist/f70bce3d-9802-4cf5-ae6d-b86c6c314107/iso-13926-2-2017

Pen systems —

Part 2:
Plunger stoppers for pen-injectors for medical use

1 Scope

This document specifies the material, performance requirements and labelling and gives recommendations for shape and dimensions of plunger stoppers for pen-injectors for medical use.

NOTE The potency, purity, stability and safety of a medicinal product during its manufacture and storage can strongly be affected by the nature and performance of the primary packaging.

2 Normative references

The following documents are referred to in the text in such a way that some or all of their content constitutes requirements of this document. For dated references, only the edition cited applies. For undated references, the latest edition of the referenced document (including any amendments) applies.

iTeh STANDARD PREVIEW
(standards.iteh.ai)

ISO 3302-1, *Rubber — Tolerances for products — Part 1: Dimensional tolerances*

ISO 7619-1, *Rubber, vulcanized or thermoplastic — Determination of indentation hardness — Part 1: Durometer method (Shore hardness)*

ISO 13926-2:2017
https://standards.iteh.ai/catalog/standards/sist/70bce3d-9802-4eb-acod-b86c6c314107/iso-13926-2-2017

ISO 8871-1, *Elastomeric parts for parenterals and for devices for pharmaceutical use — Part 1: Extractables in aqueous autoclavates*

ISO 8871-4, *Elastomeric parts for parenterals and for devices for pharmaceutical use — Part 4: Biological requirements and test methods*

ISO 11608-3, *Needle-based injection systems for medical use — Requirements and test methods — Part 3: Finished containers*

ISO 13926-1, *Pen systems — Part 1: Glass cylinders for pen-injectors for medical use*

ISO 13926-3, *Pen systems — Part 3: Seals for pen-injectors for medical use*

3 Terms and definitions

No terms and definitions are listed in this document.

ISO and IEC maintain terminological databases for use in standardization at the following addresses:

— IEC Electropedia: available at http://www.electropedia.org/

— ISO Online browsing platform: available at http://www.iso.org/obp

4 Classification

Plunger stoppers shall be classified as follows:

— Type A1: plunger stoppers with ribs;

— Type A2: plunger stoppers without ribs;

© ISO 2017 – All rights reserved

— Type A3: plunger stoppers with ribs and dome.

5 Shape and dimensions

5.1 The shapes and dimensions of plunger stoppers as shown in Figure 1 are as given in Table 1.

The dimension d_1 shall be specified by using the selected cartridges according to ISO 13926-1 and the selected seal as per ISO 13926-3. The system can then be validated as described in ISO 11608-3.

The dimensions that refer to the plunger stopper diameters (d_1, d_2, d_3) are informative.

Dimensions in millimetres

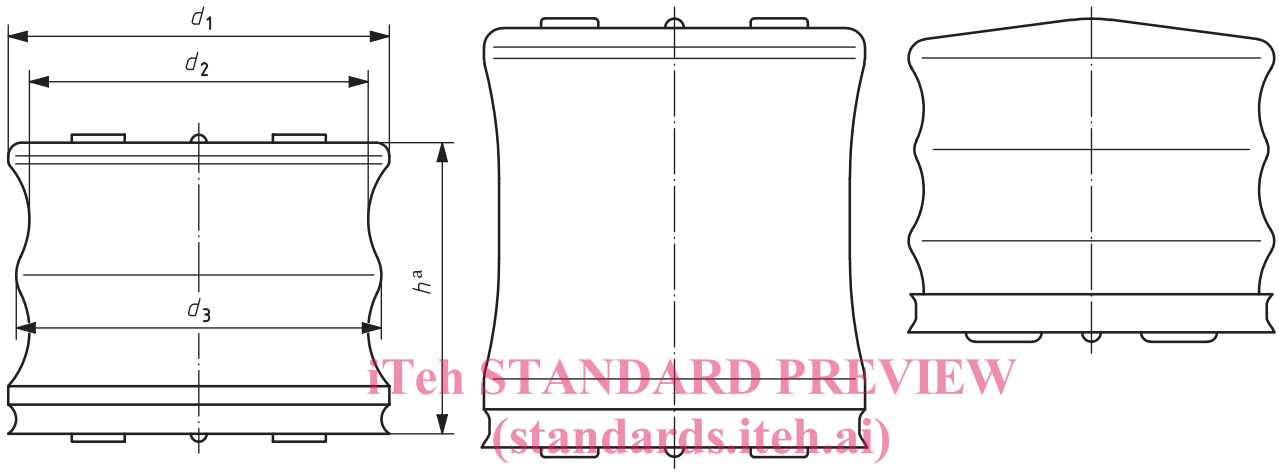

iTeh STANDARD PREVIEW
(standards.iteh.ai)

a) Type A1 **b) Type A2** **c) Type A3**

ISO 13926-2:2017
https://standards.iteh.ai/catalog/standards/sist/f70bce3d-9802-4cf5-ae6d-b86c6c314107/iso-13926-2-2017

Key

d_1, d_2, d_3 diameters of plunger stoppers

h height of plunger stoppers

a The height shall be agreed between the manufacturer and the user.

Figure 1 — Shape and dimensions of plunger stoppers for pen-injectors for medical use

Table 1 — Typical examples for dimensions of plunger stoppers for pen-injectors for medical use

Dimensions in millimetres

Nominal inner diameter of the glass cylinder[a]	Diameter		
	d_1 min.	d_3 min.	d_2 max.
6,85	7,1	7,0	6,6
8,65	8,9	8,8	8,4
9,25	9,5	9,4	9,0
9,65	9,9	9,8	9,4

a Values in accordance with ISO 13926-1.

The height shall be agreed between the manufacturer and the user.

Corresponding glass barrels are recommended in ISO 13926-1 and the corresponding seals in ISO 13926-3.

 © ISO 2017 – All rights reserved

The compatibility of the components glass barrel and rubber plunger and seals shall be thoroughly validated as described in ISO 11608-3.

5.2 In order to avoid adhesion of the plunger stoppers to each other, there shall be spacers. The height of the spacers shall not exceed 0,3 mm.

The shape of the spacers should be agreed between the manufacturer and the cartridge assembler.

5.3 If not otherwise specified, general dimensional tolerances shall be in accordance with ISO 3302-1.

6 Designation

Plunger stoppers can be designated according to their type (see Clause 4 and Figure 1). The designation shall be expressed as the word "plunger", followed by a reference to this document, followed by the inner diameter of the glass cylinder, d_2, followed by the type letter.

EXAMPLE Designation of a plunger stopper Type A1 complying with the requirements of this document for a glass cylinder with an inner diameter of 6,85 mm:

Plunger ISO 13926-2 – 6,85 – A1

7 Material

Plunger stoppers shall be made from the elastomeric formulation originally tested and approved by the end-user. The manufacturer of the plunger stoppers shall ensure the conformance of each delivery with the type sample and the compliance with previously agreed functional and compendial requirements.

iTeh STANDARD PREVIEW
(standards.iteh.ai)

The elastomeric material shall withstand two sterilization cycles when autoclaving in saturated steam at (121 ± 2) °C for 30 min without impairment of its function under the conditions of normal use. In case of other sterilization methods, e.g. irradiation, the suitability of the material has to be evaluated.

ISO 13926-2:2017
https://standards.iteh.ai/catalog/standards/sist/f70bce3d-0802-4cf5-aef6-b86c6c314107/iso-13926-2-2017

8 Requirements

8.1 General

The requirements specified in 8.2 to 8.4 represent minimum requirements which refer to the condition of the elastomeric plunger stoppers on receipt by the user.

8.2 Physical requirements

8.2.1 Hardness

The hardness agreed between the manufacturer and the user shall not differ from the nominal value by more than ±5 Shore A when tested in accordance with ISO 7619-1 on special test specimen. Alternatively, the hardness can be tested on the plunger stoppers according to ISO 48. If tested according to ISO 48, the microhardness shall not differ by more than ±5 IRHD from the type sample.

The manufacturer should provide suitable test specimen upon requests.

8.2.2 Freedom from leakage

The cartridges shall be free from leakage at the plunger when tested in accordance with the method given in Annex A.

© ISO 2017 – All rights reserved